The Right Connection®

1” Chlorine Angle Valve

Controls Flow of Liquid and Vapor Chlorine During Loading and Unloading of Tank Cars

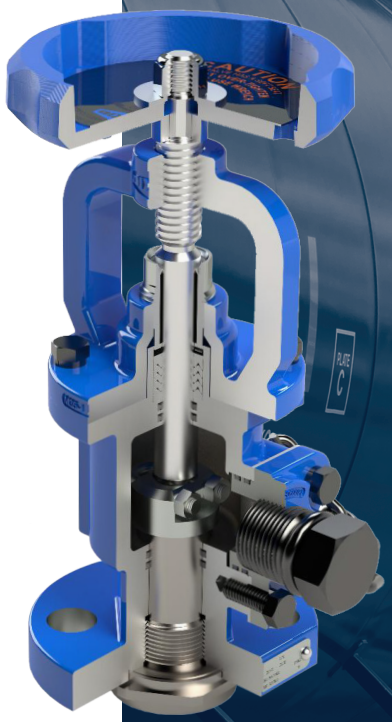

Features

- Fluoropolymer coating for long life
- Threaded seat insert for easy removal
- Meets CI Pamphlet 166 design requirements
- Approved for service trial ST-503
- AAR Approval – E242119

Materials

- Body: Monel® 400
- Stem and insert: Hastelloy® C276
- Seals: PTFE
- Fluoropolymer coating
- Alternate materials available

Specifications

- Test pressure: 600 PSIG
- Operating temperature range: **-40°F (-40°C) to 350°F (177°C)**
- Flow coefficient (C_V): 23
- Handwheel closing torque: 20 ft-lbs
- Mounting flange: 5” diameter with four 7/8” diameter holes on 3-1/2” diameter bolt circle
- Design cycle testing: 240 open/close cycles @ **-40°F (-40°C)**
  240 open/close cycles @ **350°F (177°C)**

Additional Design Testing – Not Required by AAR

- Shock: +/- 20G, 11ms, half sine wave, three pulses positive, three negative in X, Y, and Z axes
- Vibration: 5G for 8 hours at resonance frequency
  Y axis: 390 Hz
  X axis: 406 Hz
- Valve subjected to a post shock and vibration pressure test at 650 PSIG on seat, stem packing, and outlet flange

Part #	Description
R-V100M100PG000	1” chlorine angle valve

Dixon

1 Dixon Square
Chestertown, MD 21620
ph: 877.963.4966
fx: 800.283.4966
dixonvalve.com

Technical Information

The Right Connection®

Materials

No.	Description	Material
1	body	ASTM A494 GR. M35.1*
2	bonnet	ASTM A494 GR. M35.1*
3	seat insert	Hastelloy® C*
4	stem	Hastelloy C*
5	seat retainer	Monel®*
6	soft seat	glass-filled PTFE*
7	disc nut	Monel*
8	knurled dowel pin	Monel*
9	U-bolt	Monel*
10	hex lock nut	Monel*
11	outlet flange	Monel*
12	outlet flange gasket	Garlock® 3510*
13	outlet flange O-ring	FKM*
14	plug/chain assembly	Monel/stainless steel*
15	seat insert gasket	Garlock 3510*
16	seat insert O-ring	FKM*
17	stem O-ring	FKM*
18	packing set	PTFE*
19	washer	Monel*
20	wave spring	Monel*
21	packing bushing	Monel*
22	PTFE insert	PTFE*
23	wiper seal	PTFE*
24	split lock washer	Monel*
25	hex bolt	Monel*
26	handwheel	gray iron
27	nameplate	Monel*
28	drive screw	stainless steel
29	warning label	stainless steel
30	washer	stainless steel
31	lock nut	stainless steel/nylon

*Alternate materials available

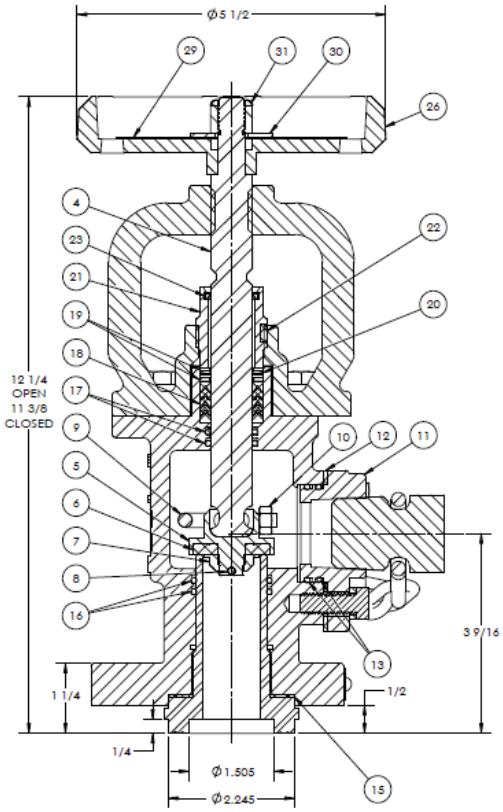

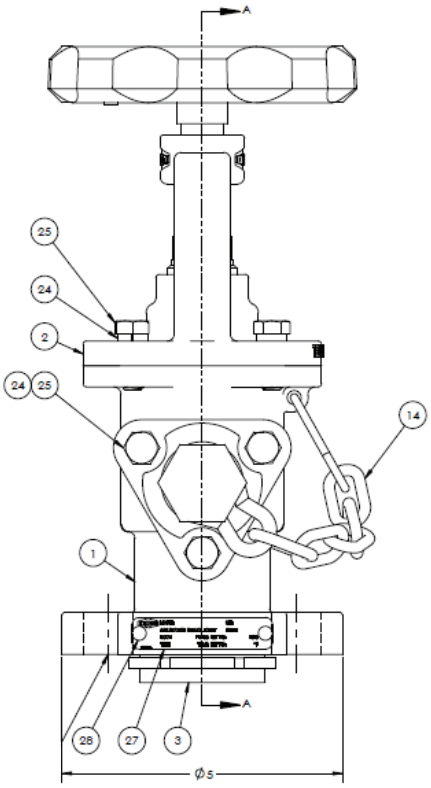

Warning & Safety

Dixon® valves are designed to work safely for their intended use. Failure to know and understand the intended use or to consider the size, temperature, application, media, pressure and manufacturers recommendations when selecting the proper valve assembly components can result in accidents and injuries, including death and serious and permanent injuries. Dixon recommends that all valve assemblies be tested in accordance with ASME and API recommendations and be inspected regularly to ensure that their use remains appropriate and that they are not damaged.

At no charge, Dixon is available to consult, train, and recommend the proper selection and application of all valves we sell. We strongly recommend that distributors and end users make use of Dixon's Testing and Recommendation Services. Contact Dixon to learn more.

© 2026 DVCC • 1INCHCHLORINEAV_1026